DRAGO

Drago America
www.dragoamerica.com

Project Name: _____
Location: _____
Item #: _____ Qty: _____
Model #: _____

SIA #

AIA #

Model:
DRCBR48

Charbroiler

48" - Propane & Natural Gas

DRAGO
COOKING



Features & Benefits

Strong & Durable Structure

- Stainless steel front, sides and plating zone.
- Welded and polished stainless steel seams.
- Work height at range level when it´s placed on a equipment stand.
- Large 4" (100 mm) stainless steel plating zone.
- Heavy duty metal knobs with heat protection grips.
- Removable crumb tray for easy cleaning.
- Insulated equipment for temperature retention.

Gradient Broiler Burner System:

- Stainless steel burners with a capacity of 35,000 Btu/hr.
- One burner located every 12" (305 mm) with individual control.
- Removable stainless steel radiants prevent burner obstruction, provide fast heating, minimize flare-ups and provide even broiling.

Grates:

- High-strength cast iron grates that provide attractive grill marks.
- 3" x 22" (76 mm x 559 mm) removable sections for easy and secure cleaning.
- Sloped cooking surface that provides a range of cooking temperatures.
- No tools required to remove stainless steel grates and radiants for cleaning.

Certifications

Intertek

22/04/2024

Approvals:

Available At:

Model:
DRCBR48

Charbroiler

48” - Propane & Natural Gas

Burners	Gas Output	Broiler Dimensions			Net Weight
		L	W	H	
4	140,000 Btu/hr	48” (1219 mm)	27.3” (694 mm)	15” (381 mm)	205 Lb (93 Kg)

Plan View

Front View

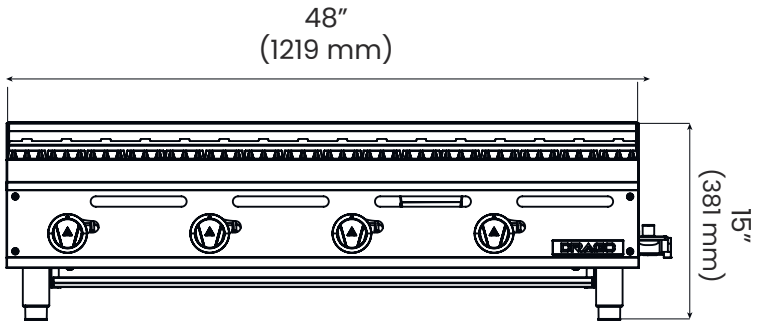

Side View

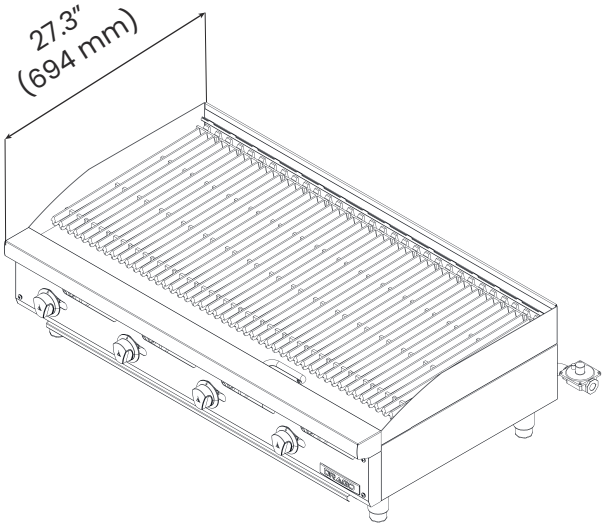

Spec

Gas Specifications:	
Gas Type:	LP / NG
Manifold pressure:	11” W.C. / 5” W.C.
Gas connection:	3/4”
**Specify type of gas and elevation if over 2000 ft.*	

Packaging data:	
Dimensions:	L 50” (1270 mm) W 32.2” (820 mm) H 20.4” (520 mm)
Crated weight:	216 Lb (98 Kg)

- Slight variations may exist.

DRAGO

Drago America
www.dragoamerica.com
sales@dragoamerica.com
9777 W. Gulf Bank Road Suite 200, Houston, Texas 77040